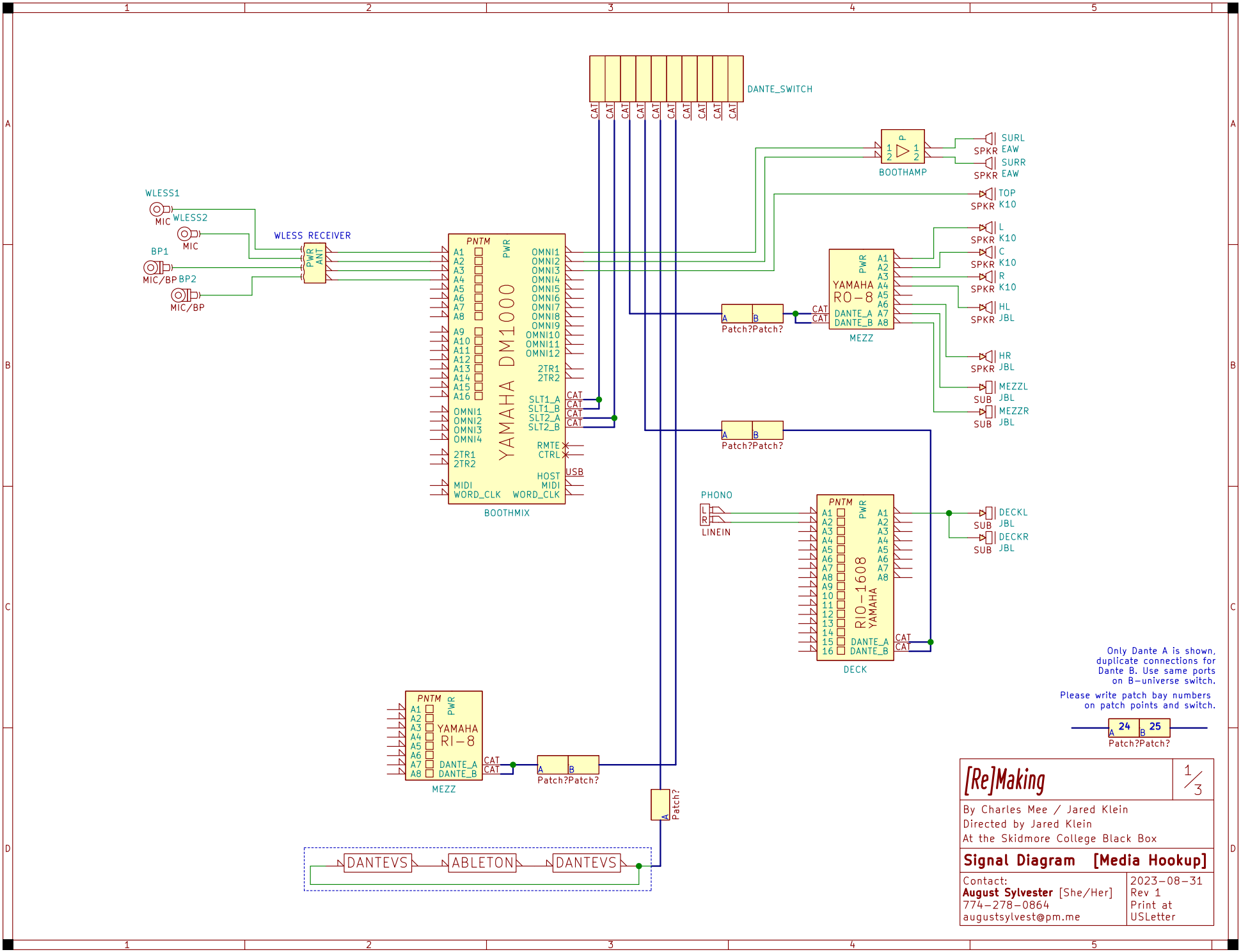
DANTE_SWITCH
CAT
WLESS1
MIC
WLESS2
MIC
BP1
MIC/BP
BP2
MIC/BP
WLESS RECEIVER
PWR
ANT
PNTM
YAMAHA DM1000
BOOTHMIX
A1 A2 A3 A4 A5 A6 A7 A8 A9 A10 A11 A12 A13 A14 A15 A16
OMNI1 OMNI2 OMNI3 OMNI4 OMNI5 OMNI6 OMNI7 OMNI8 OMNI9 OMNI10 OMNI11 OMNI12
2TR1 2TR2
SLT1_A SLT1_B SLT2_A SLT2_B
RMTE CTRL
HOST MIDI
USB
MIDI WORD_CLK
BOOTHAMP
SPKR
SURL EAW
SURR EAW
TOP K10
L K10
C K10
R K10
HL JBL
HR JBL
SUB
MEZZL JBL
MEZZR JBL
YAMAHA RO-8
DANTE_A DANTE_B
MEZZ
Patch?Patch?
PHONO
LINEIN
YAMAHA RIO-1608
DECKL JBL
DECKR JBL
DECK
YAMAHA RI-8
DANTEVS
ABLETON
Patch?
Only Dante A is shown, duplicate connections for Dante B. Use same ports on B-universe switch.
Please write patch bay numbers on patch points and switch.
24
25
[Re]Making
1/3
By Charles Mee / Jared Klein
Directed by Jared Klein
At the Skidmore College Black Box
Signal Diagram [Media Hookup]
Contact:
August Sylvester [She/Her]
774-278-0864
augustsylvest@pm.me
2023-08-31
Rev 1
Print at USLetter